Electrolux PROFESSIONAL

Modular Cooking Range Line 700XP 4-Hot Plates Electric Boiling Top Range

ITEM #

MODEL #

NAME #

SIS #

AIA #



371015 (E7ECEH4R00)	4-hot plate (2,6 kW each) electric boiling top
371127 (E7ECEH4R0N)	4-hot plate (2,6 kW each) electric boiling top

Short Form Specification

Item No.

To be installed on open base installations, bridging supports or cantilever systems. Four 2.6 kW cast-iron hot plates hermetically sealed to the one-piece top. Exterior panels in stainless steel with Scotch Brite finish. One piece pressed work top in 1.5 mm thick stainless steel. Right-angled side edges to allow flush-fitting junction between units.

Main Features

- Unit to be mounted on open base cupboards, bridging supports or cantilever systems.
- The four 2.6kW cast-iron plates are hermetically sealed to the one-piece top.
- The special design of the control knob system guarantees against water infiltration.
- IPx4 water protection.
- Suitable for countertop installation.

Construction

- All exterior panels in Stainless Steel with Scotch Brite finishing.
- One piece pressed 1.5 mm work top in Stainless steel.
- Model has right-angled side edges to allow flush fitting joints between units, eliminating gaps and possible dirt traps.

Optional Accessories

• Junction sealing kit	PNC 206086 ❑
• Support for bridge type installation, 800mm	PNC 206137 ❑
• Support for bridge type installation, 1000mm	PNC 206138 ❑
• Support for bridge type installation, 1200mm	PNC 206139 ❑
• Support for bridge type installation, 1400mm	PNC 206140 ❑
• Support for bridge type installation, 1600mm	PNC 206141 ❑
• Water column with swivel arm (water column extension not included)	PNC 206289 ❑
• Water column extension for 700 line	PNC 206291 ❑
• Chimney upstand, 800mm	PNC 206304 ❑
• Right and left side handrails	PNC 206307 ❑
• Back handrail 800 mm	PNC 206308 ❑
• Chimney grid net, 400mm (700XP/900)	PNC 206400 ❑
• Frontal handrail, 800mm	PNC 216047 ❑
• Frontal handrail, 1200mm	PNC 216049 ❑
• Frontal handrail, 1600mm	PNC 216050 ❑
• Large handrail - portioning shelf, 800mm	PNC 216186 ❑
• 2 side covering panels for top appliances	PNC 216277 ❑
• Basket for 7lt top and free standing fryers (only for 371015)	PNC 921608 ❑

APPROVAL:

Modular Cooking Range Line
700XP 4-Hot Plates Electric Boiling Top Range

Front

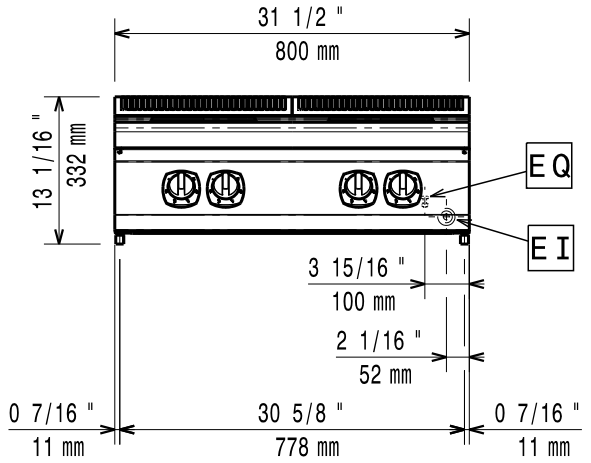

Side

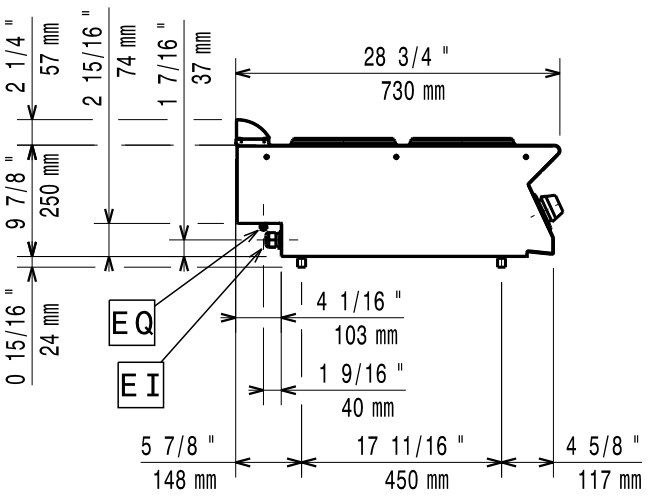

EI = Electrical inlet (power)
EQ = Equipotential screw

Top

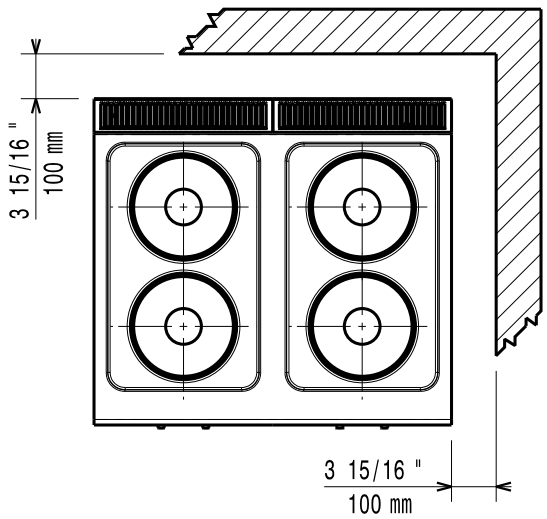

Electric

Supply voltage:	
371015 (E7ECEH4R00)	380-400 V/3 ph/50-60 Hz
371127 (E7ECEH4R0N)	230 V/3 ph/50/60 Hz
Total Watts:	10.4 kW

Key Information:

Net weight:	40 kg
Shipping weight:	
371015 (E7ECEH4R00)	39 kg
371127 (E7ECEH4R0N)	40 kg
Shipping height:	
371015 (E7ECEH4R00)	520 mm
371127 (E7ECEH4R0N)	540 mm
Shipping width:	820 mm
Shipping depth:	860 mm
Shipping volume:	
371015 (E7ECEH4R00)	0.37 m³
371127 (E7ECEH4R0N)	0.38 m³
[NOT TRANSLATED]	
371015 (E7ECEH4R00)	EH74T
371127 (E7ECEH4R0N)	N7CE1
Front Plates Power:	2.6 - 2.6 kW
Back Plates Power:	2.6 - 2.6 kW
Front Plates dimensions:	Ø 230 Ø 230
Back Plates dimensions:	Ø 230 Ø 230

If appliance is set up or next to or against temperature sensitive furniture or similar, a safety gap of approximately 150 mm should be maintained or some form of heat insulation fitted.

The company reserves the right to make modifications to the products without prior notice. All information correct at time of printing.

2026.11.19